SFP 155Mbps 1310nm 40km

SLS-1531-40-X

Overview

The SFP transceivers are high performance, cost effective modules supporting 155Mbps data-rate and 40km transmission distance with SMF.

The transceiver consists of three sections: a FP laser transmitter, a PIN photodiode integrated with a trans-impedance preamplifier (TIA) and MCU control unit. All modules satisfy class I laser safety requirements.

The transceivers are compatible with SFP Multi-Source Agreement (MSA) and SFF-8472. For further information, please refer to SFP MSA.

Features

- Up to 155Mbps data-rate
- 1310nm FP laser and PIN photo detector for 40km transmission
- Compliant with SFP MSA and SFF-8472 with duplex LC receptacle
- Digital Diagnostic Monitoring:
  Internal Calibration or External Calibration
- Compatible with RoHS
- +3.3V single power supply
- Operating case temperature:
  Standard: 0 to +70°C
  Industrial: -40 to +85°C

Applications

- SDH STM-1, S-1.1,L-1.1, L-1.2
- SONET OC-3 IR1,LR1,LR2
- Other optical links

Ordering Information

Part Number	Product Description
SLS-1531-40	SFP 155Mbps, 1310nm, 40km, 0ºC ~ +70ºC
SLS-1531-40-D	SFP 155Mbps, 1310nm, 40km, 0ºC ~ +70ºC, With Digital Diagnostic Monitoring
SLS-1531-40T	SFP 155Mbps, 1310nm, 40km, -40ºC ~ +85ºC
SLS-1531-40T-D	SFP 155Mbps, 1310nm, 40km, -40ºC ~ +85ºC, With Digital Diagnostic Monitoring

Module Block Diagram

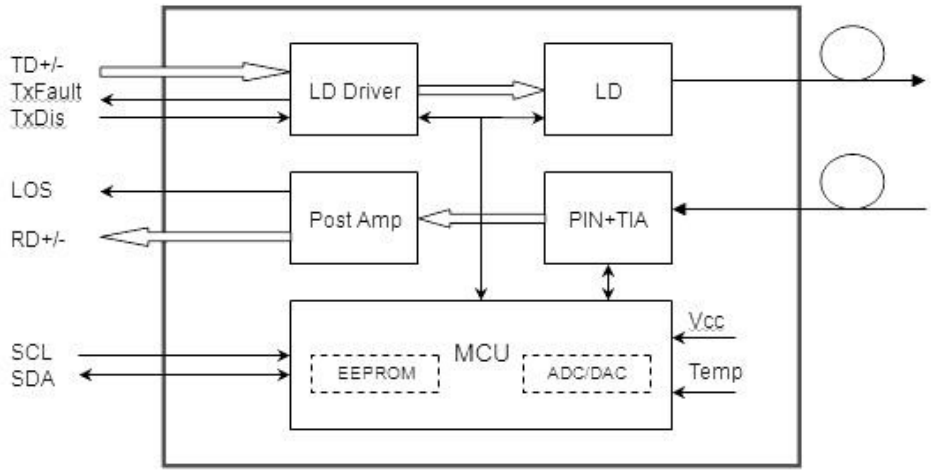

Figure1. Mechanical Specifications

Absolute Maximum Ratings

Parameter	Symbol	Min	Max	Unit
Supply Voltage	Vcc	-0.5	4.5	V
Storage Temperature	Ts	-40	+85	°C
Operating Humidity	-	5	85	%

Recommended Operating Conditions

Parameter		Symbol	Min	Typical	Max	Unit
Operating Case Temperature	Standard	Tc	0		+70	°C
	Industrial		-40		+85	°C
Power Supply Voltage		Vcc	3.13	3.3	3.47	V
Power Supply Current		Icc			300	mA
Data Rate				155		Mbps

Optical and Electrical Characteristics

Parameter	Symbol	Min	Typical	Max	Unit	Notes
Transmitter						
Centre Wavelength	λc	1260	1310	1360	nm	
Spectral Width (RMS)	σ			4	nm	
Average Output Power	Pout	-5		0	dBm	1
Extinction Ratio	ER	9			dB	
Optical Rise/Fall Time	t_r/t_f			1.3	ns	

Data Input Swing Differential		V_{IN}	300		1860	mV	2
Input Differential Impedance		Z_{IN}	90	100	110	Ω	
TX Disable	Disable		2.0		Vcc	V	
	Enable		0		0.8	V	
TX Fault	Fault		2.0		Vcc	V	
	Normal		0		0.8	V	
Receiver							
Centre Wavelength		λc	1260		1580	nm	
Receiver Sensitivity					-34	dBm	3
Receiver Overload			-3			dBm	3
LOS De-Assert		LOS_D			-36	dBm	
LOS Assert		LOS_A	-45			dBm	
LOS Hysteresis			1		4	dB	
Data Output Swing Differential		Vout	400		1800	mV	4
LOS		High	2.0		Vcc	V	
		Low			0.8	V	

Notes:
1. The optical power is launched into SMF.
2. PECL input, internally AC-coupled and terminated.
3. Measured with a PRBS 2^{23}-1 test pattern @155Mbps, BER ≤1×10^{-10}.
4. Internally AC-coupled.

Timing and Electrical

Parameter	Symbol	Min	Typical	Max	Unit
Tx Disable Negate Time	t_on			1	ms
Tx Disable Assert Time	t_off			10	µs
Time To Initialize, including Reset of Tx Fault	t_init			300	ms
Tx Fault Assert Time	t_fault			100	µs
Tx Disable To Reset	t_reset	10			µs
LOS Assert Time	t_loss_on			100	µs
LOS De-assert Time	t_loss_off			100	µs
Serial ID Clock Rate	f_serial_clock			400	KHz
MOD_DEF (0:2)-High	V_H	2		Vcc	V
MOD_DEF (0:2)-Low	V_L			0.8	V

Diagnostics

Parameter	Range	Unit	Accuracy	Calibration
Temperature	0 to +70	°C	±3°C	Internal / External
	-40 to +85			
Voltage	3.0 to 3.6	V	±3%	Internal / External
Bias Current	0 to 100	mA	±10%	Internal / External
TX Power	-5 to 0	dBm	±3dB	Internal / External
RX Power	-28 to -3	dBm	±3dB	Internal / External

Pin Definitions

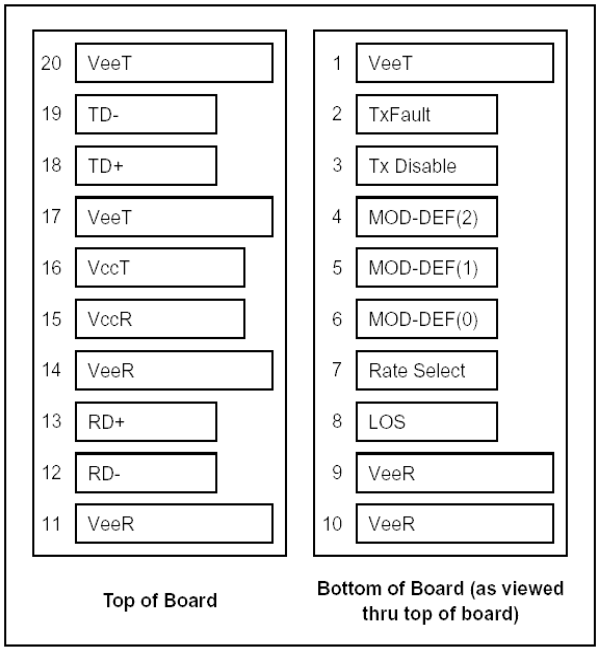

Figure2. Pin Diagram

Pin Descriptions

Pin	Signal Name	Description	Plug Seq.	Notes
1	V_{EET}	Transmitter Ground	1	
2	TX FAULT	Transmitter Fault Indication	3	Note 1
3	TX DISABLE	Transmitter Disable	3	Note 2
4	MOD_DEF(2)	SDA Serial Data Signal	3	Note 3
5	MOD_DEF(1)	SCL Serial Clock Signal	3	Note 3
6	MOD_DEF(0)	TTL Low	3	Note 3
7	Rate Select	Not Connected	3	
8	LOS	Loss of Signal	3	Note 4
9	V_{EER}	Receiver ground	1	
10	V_{EER}	Receiver ground	1	
11	V_{EER}	Receiver ground	1	

12	RD-	Inv. Received Data Out	3	Note 5
13	RD+	Received Data Out	3	Note 5
14	V_{EER}	Receiver ground	1	
15	V_{CCR}	Receiver Power Supply	2	
16	V_{CCT}	Transmitter Power Supply	2	
17	V_{EET}	Transmitter Ground	1	
18	TD+	Transmit Data In	3	Note 6
19	TD-	Inv. Transmit Data In	3	Note 6
20	V_{EET}	Transmitter Ground	1	

Notes:

Plug Seq.: Pin engagement sequence during hot plugging.

1) TX Fault is an open collector output, which should be pulled up with a 4.7k~10kΩ resistor on the host board to a voltage between 2.0V and Vcc+0.3V. Logic 0 indicates normal operation; Logic 1 indicates a laser fault of some kind. In the low state, the output will be pulled to less than 0.8V.
2) TX Disable is an input that is used to shut down the transmitter optical output. It is pulled up within the module with a 4.7k~10kΩ resistor. Its states are:
   Low (0 to 0.8V) : Transmitter on
   (>0.8V, < 2.0V) : Undefined
   High (2.0 to 3.465V) : Transmitter Disabled
   Open : Transmitter Disabled
3) Mod-Def 0,1,2. These are the module definition pins. They should be pulled up with a 4.7k~10kΩ resistor on the host board. The pull-up voltage shall be VccT or VccR.
   Mod-Def 0 is grounded by the module to indicate that the module is present
   Mod-Def 1 is the clock line of two wire serial interface for serial ID
   Mod-Def 2 is the data line of two wire serial interface for serial ID
4) LOS is an open collector output, which should be pulled up with a 4.7k~10kΩ resistor. Pull up voltage between 2.0V and Vcc+0.3V. Logic 1 indicates loss of signal; Logic 0 indicates normal operation. In the low state, the output will be pulled to less than 0.8V.
5) RD-/+: These are the differential receiver outputs. They are internally AC-coupled 100 differential lines which should be terminated with 100Ω (differential) at the user SERDES.
6) TD-/+: These are the differential transmitter inputs. They are internally AC-coupled, differential lines with 100Ω differential termination inside the module.

Recommended Interface Circuit

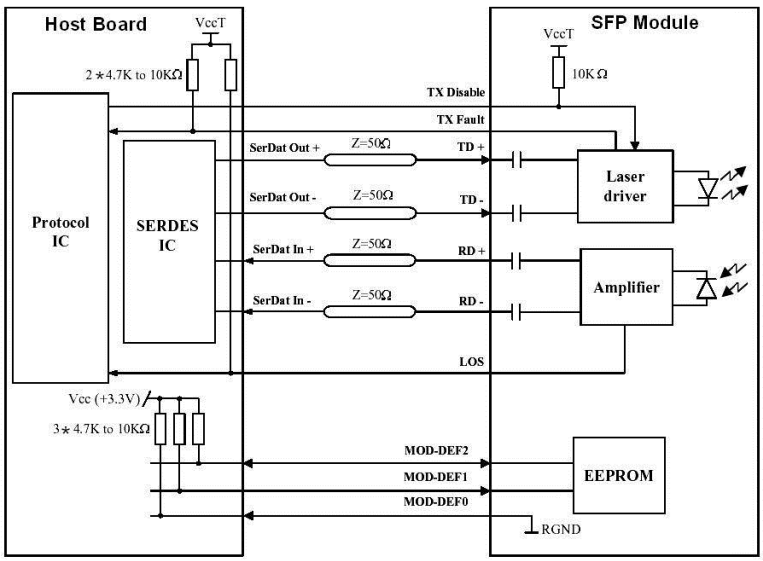

Figure3. Interface Circuit

Mechanical Dimensions

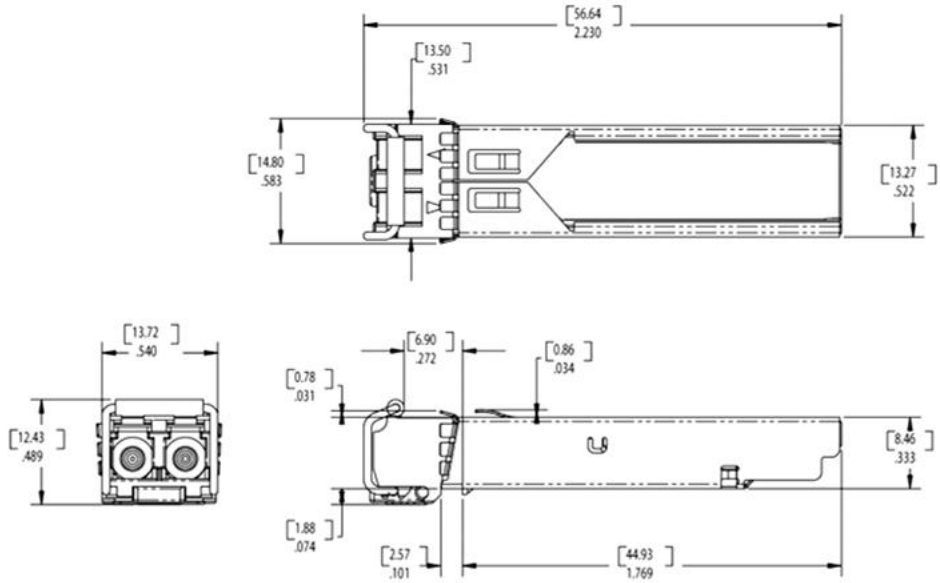

Figure4. Mechanical Dimensions

References

1. Small Form Factor Pluggable (SFP) Transceiver Multi-Source Agreement (MSA), September 2000.
2. Telcordia GR-253-CORE and ITU-T G.957 Specifications.